Name: _____ ( )

Class: Primary 5 _____

CHIJ ST NICHOLAS GIRLS' SCHOOL (PRIMARY)

Primary 5 Mathematics

2020 Termly Assessment

Paper 1

Booklet A

25 February 2020

15 questions
20 marks

Total Time for Booklets A and B: 1 hour

INSTRUCTIONS TO CANDIDATES

Do not turn over this page until you are told to do so.
Follow all instructions carefully.
Answer all questions.
Write your answers in this booklet.
The use of calculators is **NOT** allowed.

This booklet consists of 9 printed pages.

Questions **1** to **10** carry 1 mark each. Questions **11** to **15** carry 2 marks each. For each question, four options are given. One of them is the correct answer. Make your choice (1, 2, 3 or 4). Shade the correct oval (1, 2, 3, or 4) on the Optical Answer Sheet.

(20 marks)

---

1. Six hundred and four thousand, seven hundred and twelve written in numerals is _____.

(1) 64 712

(2) 604 712

(3) 640 712

(4) 6 004 712

2. Express 9.08 as a fraction in the simplest form.

(1) $9\frac{2}{5}$

(2) $9\frac{2}{25}$

(3) $9\frac{2}{250}$

(4) $9\frac{49}{50}$

3. Round 41.95 to 1 decimal place.

(1) 41.8

(2) 41.9

(3) 42.0

(4) 42.9

4. What is the size of ∠XOY?

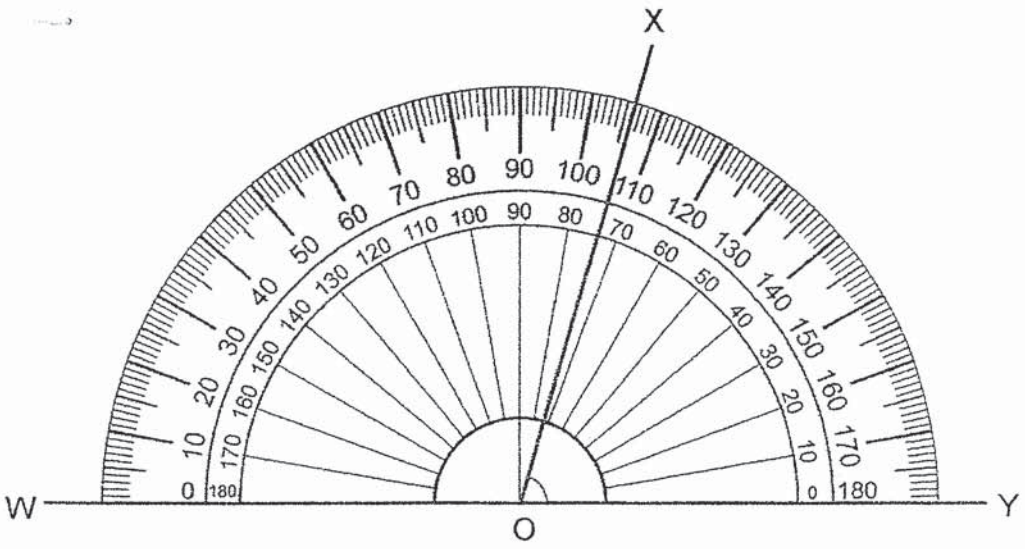

(1) 74°

(2) 76°

(3) 86°

(4) 106°

5. Which of the following is likely to be the length of an adult size bed?

(1) 19 cm

(2) 19 m

(3) 190 cm

(4) 190 m

6. The total height of Kim, Lina and Misa is 390 cm. Kim is 118 cm tall. Lina is 42 cm shorter than Misa. What is Lina's height?

(1) 94 cm

(2) 115 cm

(3) 136 cm

(4) 157 cm

Use the information below to answer Questions **7** *and* **8**.

The graph below shows the number of visitors to a resort from 2015 to 2019.

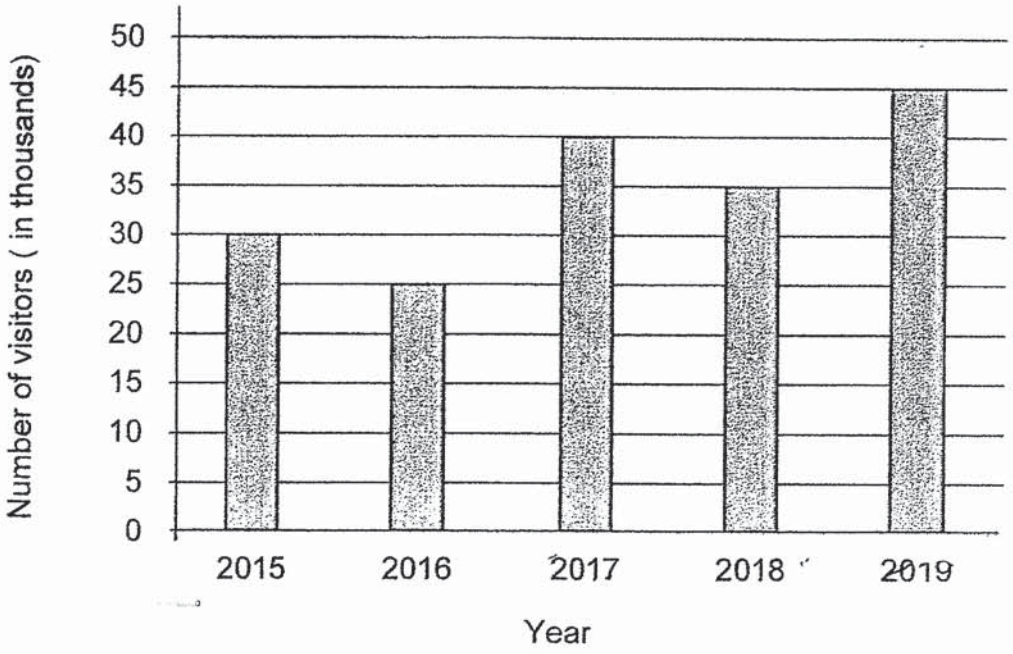

7. During which one-year period was the increase in number of visitors the greatest?

(1) 2015 to 2016

(2) 2016 to 2017

(3) 2017 to 2018

(4) 2018 to 2019

8. From 2015 to 2019, how many years did the resort receive more than 30 000 visitors?

(1) 1

(2) 2

(3) 3

(4) 4

9. In the figure below, which line is parallel to the line EF?

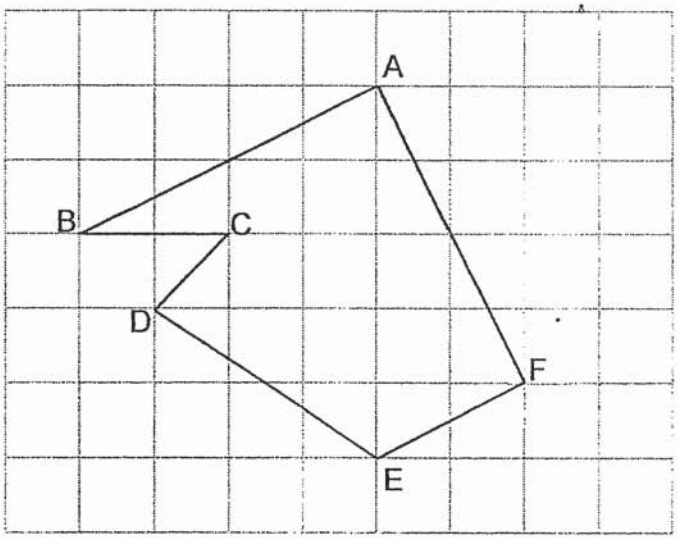

(1) AB

(2) AF

(3) CD

(4) DE

10. A number is between 15 and 50. It is a common multiple of 4 and 8. One of its factors is 6. What is the number?

(1) 16

(2) 32

(3) 40

(4) 48

11. The figure below is made up of 2 similar rectangles. The length of each rectangle is twice its breadth. The perimeter of the figure is 80 cm. What is the length of each rectangle?

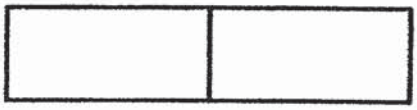

(1) 8 cm

(2) 10 cm

(3) 16 cm

(4) 20 cm

12. Cindy had some flour. She used $\frac{2}{5}$ kg of the flour to bake a cake and $\frac{1}{4}$ kg of the flour to bake some cookies. How much flour did she use altogether?

(1) $\frac{1}{10}$ kg

(2) $\frac{1}{20}$ kg

(3) $\frac{3}{20}$ kg

(4) $\frac{13}{20}$ kg

13. Mdm Sharifah bought 15 m of ribbon to give to her 6 pupils equally. How much ribbon did each pupil receive?

(1) $\frac{2}{5}$ m

(2) $\frac{3}{5}$ m

(3) $1\frac{1}{2}$ m

(4) $2\frac{1}{2}$ m

14. The total cost of 8 identical pens and 2 identical files is \$32. The total cost of 3 such files is the same as the total cost of 4 such pens. Find the cost of each file.

(1) \$2.40

(2) \$3.20

(3) \$3.00

(4) \$4.00

15. Ivan sat in a cinema. There were 5 rows of seats behind him and 14 rows of seats in front of him. There were 7 seats to his left and 19 seats to his right. How many seats were there in the cinema altogether?

(1) 540

(2) 520

(3) 513

(4) 494

Name: _____ ( )

Class: Primary 5 _____

CHIJ ST NICHOLAS GIRLS' SCHOOL (PRIMARY)

Primary 5 Mathematics

2020 Termly Assessment

Paper 1

Booklet B

25 February 2020

Booklet A	20
Booklet B	25
Total (Paper 1)	45

15 questions
25 marks

Total Time for Booklets A and B: 1 hour

INSTRUCTIONS TO CANDIDATES

Do not turn over this page until you are told to do so.
Follow all instructions carefully.
Answer all questions.
Write your answers in this booklet.
The use of calculators is **NOT** allowed.

This booklet consists of 10 printed pages.

Questions **16** to **20** carry 1 mark each. Show your working clearly and write your answers in the spaces provided. For questions which require units, give your answers in the units stated. (5 marks)

Do not write in this space

16. Find the value of 150 x 700.

Ans: _____

17. In the number line below, what is the mixed number indicated by the arrow?

Ans: _____

18. Arrange the following in increasing order.

0.56 ,	$\frac{5}{8}$,	0.568

Ans: _____ , _____ , _____

MARKS:

19. Jane is facing north-west now. What is the angle that she must turn anti-clockwise to face east?

Do not write in this space

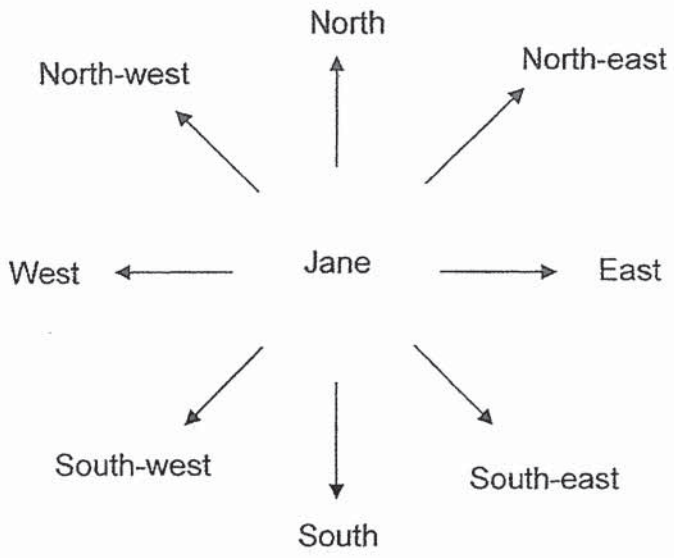

Ans: _____ °

20. Joshua was at a concert. His watch was 20 minutes fast. He noticed on his watch that the concert ended at 10.10 p.m.. What was the actual time the concert ended? Express your answer using the 24-hour clock.

Ans: _____

MARKS: ☐

Questions **21** to **30** carry 2 mark each. Show your working clearly and write your answers in the spaces provided. For questions which require units, give your answers in the units stated. (20 marks)

Do not write in this space

21. 41 tenths and 65 thousandths is the same as _____.
Express your answer as a decimal.

Ans: _____

22. Kumar bought 96 mangoes at a fruit stall at 3 for $5. How much did he pay for the mangoes?

Ans:$ _____

MARKS:

23. 4 years ago, Richard was 3 times as old as Adele. Their total age now is 44 years old. How old is Adele now?

Do not write in this space

Ans: _____

24. The figure below is made up of similar squares. How many more squares must be shaded such that $\frac{2}{3}$ of the figure is shaded?

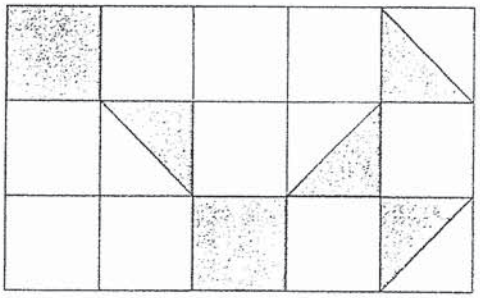

Ans: _____

MARKS:

25. The figure below is a rectangle. $\angle a$ is twice the size of $\angle b$. Find $\angle a$.

Do not write in this space

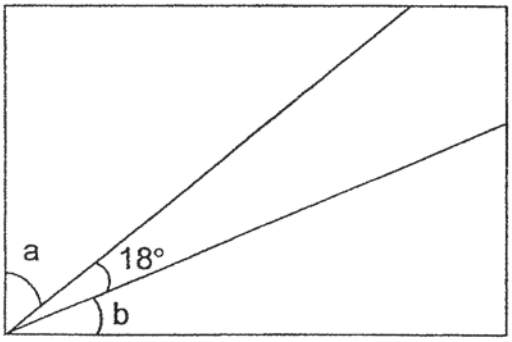

Ans: _____

26. Leanne baked some fruit tarts. She gave 28 fruit tarts to her neighbour and 140 fruit tarts to some friends. She then had $\frac{4}{7}$ of the fruit tarts left. How many fruit tarts did she bake?

Ans: _____

MARKS:

27. The table below shows the number of muffins sold by a bakery in 5 months.

Do not write in this space

Month	Feb	Mar	Apr	May	Jun
Number of muffins sold	320	120	360	240	160

The statement below is either true or false from the information given.
Put a tick (✓) in the correct column.

	True	False
The difference in the number of muffins sold between April and May is the same as the number of muffins sold in March.		
The number of muffins sold in February is twice the number of muffins sold in May.		

MARKS:

28. The line graph below shows the number of books read by a group of children in a week.
Erin accidentally spilled some ink on the graph. However, she remembered that the number of children who had read 3 books was 3 times of the total number of children who had read only 1 book and 2 books.

Use the data from the graph to complete the table.

Do not write in this space

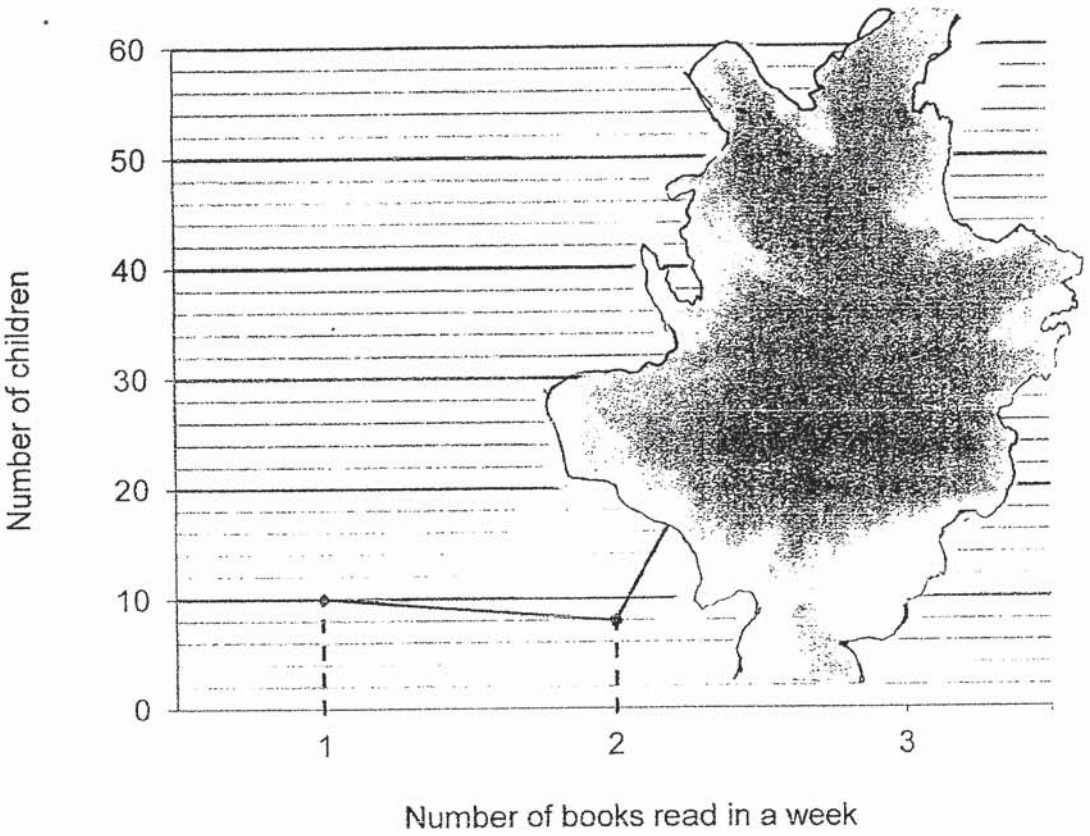

Number of books read in a week	1	2	3
Number of children			

MARKS:

29. The figure below shows a rectangular room. Mrs Tan covers the room with grey and white carpet as shown. Find the perimeter of the white carpet.

Do not write in this space

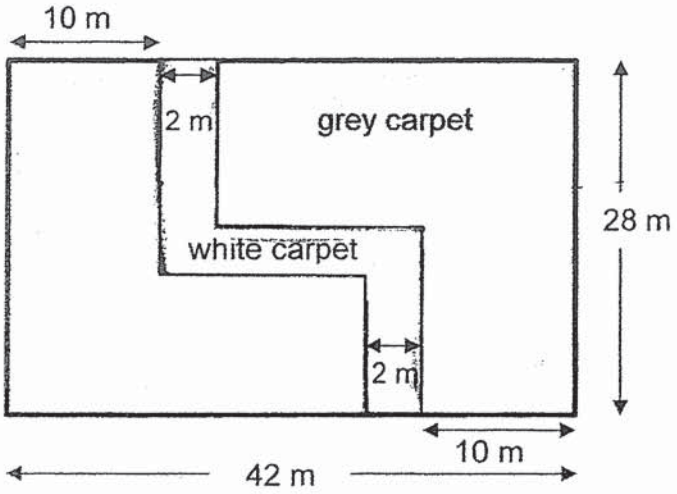

Ans: _____ m

MARKS:

30. The figures below are made up of similar triangles. The figures follow a pattern.

Do not write in this space

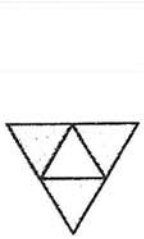

Figure 1

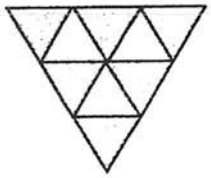

Figure 2

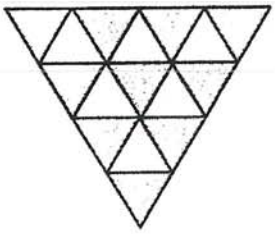

Figure 3

(a) Study the pattern and complete the table below.

Figure Number	Number of unshaded triangles	Number of shaded triangles	Total number of triangles
1	1	3	4
2	3	6	9
3	6	10	16
4			

(b) What is the total number of triangles in Figure 10?

Ans: _____ [1]

End of Paper

MARKS:

ANSWER KEY

YEAR : 2020
LEVEL : PRIMARY 5
SCHOOL : CHIJ ST NICHOLAS GIRLS' SCHOOL
SUBJECT : MATHEMATICS
TERM : TERMLY ASSESMENT PAPER 1

BOOKLET A

Q1	2	Q2	2	Q3	3	Q4	1	Q5	3
Q6	2	Q7	2	Q8	3	Q9	1	Q10	4
Q11	3	Q12	4	Q13	4	Q14	4	Q15	1

BOOKLET B

Q16. 105000

Q17. $2\frac{7}{8}$

Q18. 0.56,0.568,$\frac{5}{8}$

Q19. 180°+45°=225°

Q20. 24 hour
2150-20mins=2210

Q21. 41 Tenths = 4.1
65 thousandths = 0.065
4.1 +0.065 = 4.165

Q22. 96÷3=32
32×5=160

Q23. 44-8=36(both Richard and Adele age -4)
36÷4=9
9+4=13

Q24. 15÷3=5
5×2=10
10-4=6

Q25. 90-18=72
72÷3=24
24×2=48

Q26.
3units =140+28=168

sgtestpaper.com
More papers at

1unit=56
56×7=392

Q27

	True	False
The difference in the number of muffins sold between April and May is the same as the number of muffins sold in march .	✔	
The number of muffins sold in February is twice the number of muffins sold in May.		✔

Q28.

Number of books read in a week	1	2	3
Number of children	10	8	54

Q29. 28×2=56
2×2=4
20×2=40
56+4+40=100

Q30.
A)

Figure number	Number of unshaded triangle	Number of shaded triangle.	Total number of triangle
1	1	3	4
2	3	6	9
3	6	10	16
4	10	15	25

B)10+1=11
11×11=121.

2
END .